TFS-4092

Conventional Fire Alarm Sounder and Beacon



Teknim TFS-4092 Conventional fire alarm sounder and beacon features an aesthetic design and low power consumption and is compatible with any brand that has a conventional sounder output.

General Features

- EN 54-23 and EN 54-3 Certified
- Sound level 100 dB±5 dB
- Light coverage volume W-2,4-2,5
- Protection class IP42
- UL94 V-0 flame-retardant material
- Suitable for wall mounting
- Screw locking feature against tampering

EN54-3 EN54-23

CE
26
1922-CPR-2695

Technical Specifications

	TFS-4092
Power Input	24VDC – 27VDC
Beacon Rate	1 Hz
Coverage Area	W-2,4-2,5
Sound Level	100 dB±5 dB (@1meter,24Vdc)
Housing Material	UL94 V-0 flame-retardant material (Red-Transparent)
IP Class	IP42
Alarm Current	30 mA
Led Flash Colors	White
Usage Area	Internal use in building / Type A device
Weight (Base Included)	210 gram
Dimensions (Base Included)	Ø:106,6mm, h:69.5mm
Operating Temperature Range	-10°C ~ +55°C
Humidity	@ +40°C %0 ~ %95 Max
Usable Cable Cross-Section	Shield fire cable (0.8mm ² ~ 2.5mm ²)

Dimensions

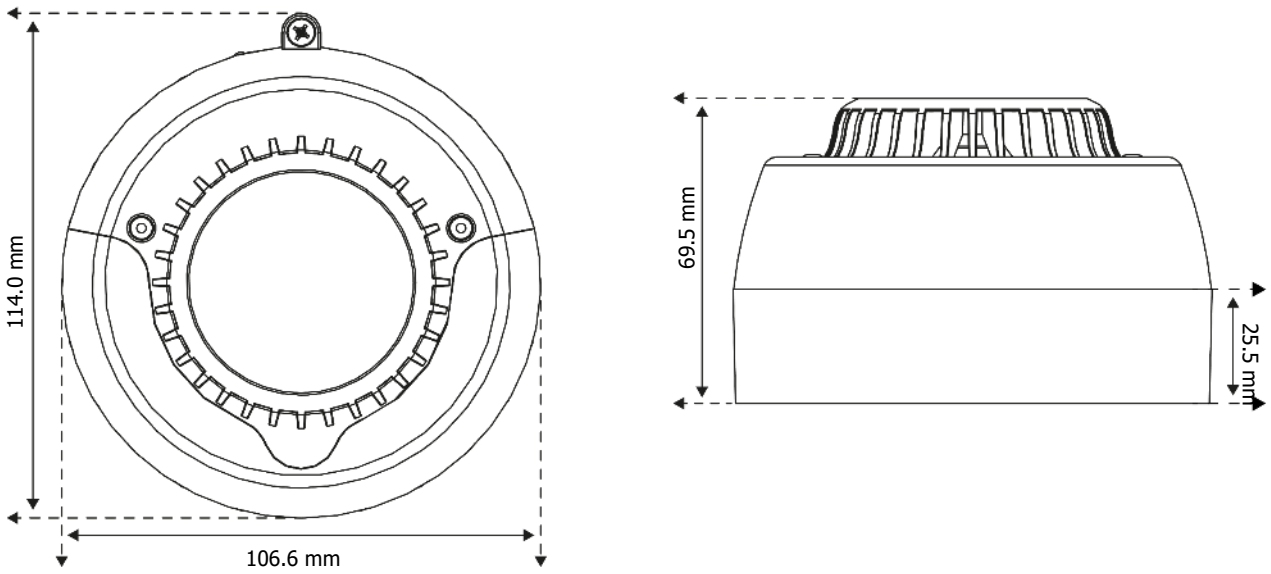

Teknim Elektronik SAN. ve TİC. A.Ş
Dudullu OSB Mahallesi 1.Cadde No:6/1 Ümraniye-İSTANBUL
Tel: +90 (216) 455 88 46 - satis@teknim.com
www.teknim.com