TFS-4091

Conventional Fire Alarm Sounder



Teknim TFS-4091 Conventional fire alarm sounder features an aesthetic design and low power consumption and is compatible with any brand that has a conventional sounder output.

EN54-3

CE
26
1922-CPR-2694

General Features

- EN 54-3 Certified
- Sound level 100 dB±5 dB
- Protection class IP21C
- UL94 V-0 flame-retardant material
- Suitable for wall mounting
- Screw locking feature against tampering

Technical Specifications

	TFS-4091
Power Input	24VDC – 27VDC
Sound Level	100 dB±5 dB (@1meter,24Vdc)
Housing Material	UL94 V-0 flame-retardant material (Red)
IP Class	IP21C
Alarm Current	14 mA
Usage Area	Internal use in building / Type A device
Weight (Base Included)	210 gram
Dimensions (Base Included)	Ø:106,6mm, h:69.5mm
Operating Temperature Range	-10°C ~ +55°C
Humidity	@ +40°C %0 ~ %95 Max
Usable Cable Cross-Section	Shield fire cable (0.8mm ² ~ 2.5mm ²)

Dimensions

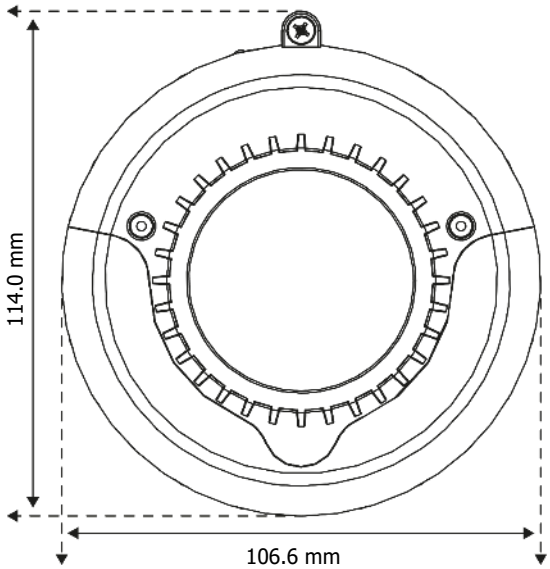

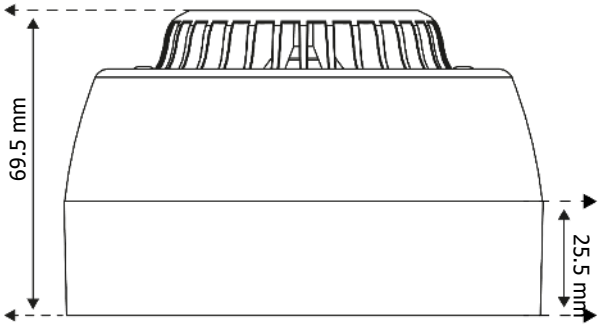

Teknim Elektronik SAN. ve TİC. A.Ş
Dudullu OSB Mahallesi 1.Cadde No:6/1 Ümraniye-İSTANBUL
Tel: +90 (216) 455 88 46 - satis@teknim.com
www.teknim.com